REVISIONS					
ECN NO.	REV.	BY	APV.	DATE	DESCRIPTION OF CHANGE(S)
804A	-	JA		8-1-01	PRODUCTION RELEASE
804I	F	TH		2-27-02	F1- WAS 2X...; F2- WAS .812Ñ.010
804M	G	TH		4-3-02	WAS .312Ñ.010
22929	H	TGD		5-8-19	H1- CREATED A 2D DRAWING IN SOLIDWORKS; H2- UPDATED THE DRAWING FORMAT; H3- ADDED VOLUME & SURFACE AREA; H4- CROSS SECTION WAS "NOM AREA = .7615 SQ.IN." & PERIMETER WAS "NOM PERIMETER = 6.848 IN."
24878C	J	MCM	BL	6-15-22	1.368±.012 WAS 1.375±.012

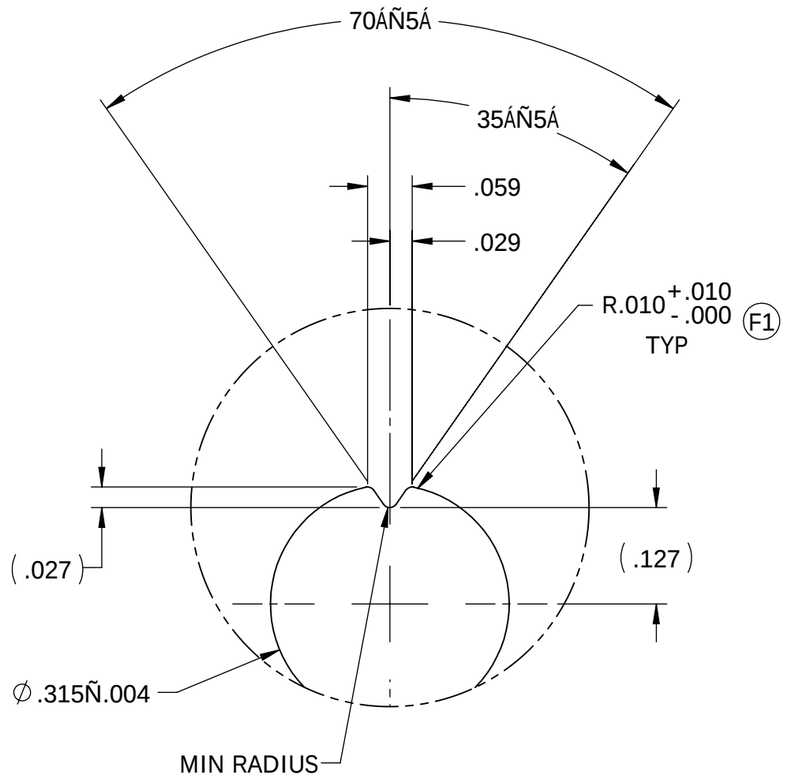

DETAIL A
SCALE 5 : 1

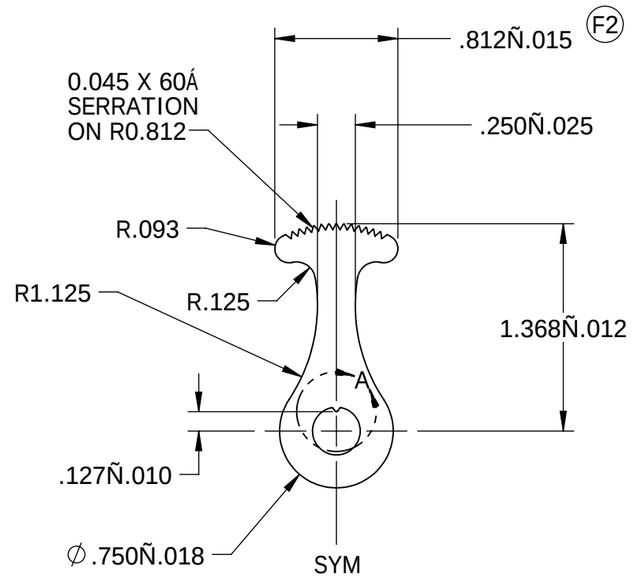

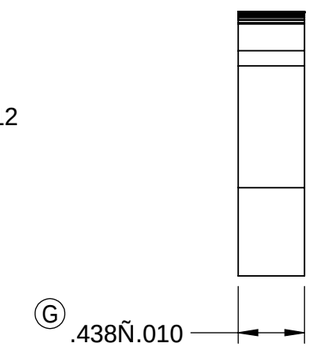

NOTES:

1. FINISH: TUMBLE BURNISH

H4 H3

COPYRIGHT 2018, DOMETIC CORPORATION. NOTICE: THIS DRAWING, AND THE INFORMATION CONTAINED HEREON, ARE CONFIDENTIAL AND PROPRIETARY TO DOMETIC CORPORATION. THIS DRAWING IS PROTECTED BY US AND INTERNATIONAL COPYRIGHT LAWS. NEITHER THE DRAWING NOR THE INFORMATION DISCLOSED ON IT MAY BE TRANSFERRED, USED, OR COPIED EXCEPT FOR DOMETIC'S BENEFIT AND BY DOMETIC'S WRITTEN DIRECTION OR CONSENT. IF YOU ARE IN POSSESSION OF THIS DRAWING WITHOUT DOMETIC'S WRITTEN INSTRUCTION OR CONSENT, PLEASE RETURN IT IMMEDIATELY TO DOMETIC. USE OF THIS DRAWING UNDER SERVICE OR SUPPLY OBLIGATION TO DOMETIC IS STRICTLY LIMITED TO THE SPECIFICATIONS APPEARING HEREON UNLESS OTHERWISE EXPRESSLY DIRECTED IN WRITING BY DOMETIC.

DIMENSIONING AND TOLERANCING IN ACCORDANCE WITH ASME Y14.5-2009

UNLESS OTHERWISE SPECIFIED, ALL DIMENSIONS IN INCHES [MILLIMETERS], ANGLES IN DEGREES

ANY CHANGES TO MATERIAL, TOOLING, OR MANUFACTURING PROCESS MUST BE REAPPROVED PER CURRENT DOMETIC QUALITY PROCESS

PARAMETERS FOR REFERENCE

VOLUME (in³): 0.34
SURFACE AREA (in²): 4.44
CROSS SECTION (in²): 0.767
PERIMETER (in): 6.641

B PAPER SIZE

DO NOT SCALE DRAWING

REFER TO DOMETIC QUALITY DESIGNATION STANDARD 12-50

THIRD ANGLE PROJECTION

DOMETIC

509 S. Poplar St. LaGrange IN 46761 USA

NAME: LEVER, LOCK

DIMENSIONAL TOLERANCES UNLESS NOTED OTHERWISE:
.X: ±.1[2.5]
.XX: ±.03[.76]
.XXX: ±.005[.125]
ANGULAR: ±1°

MATERIAL: 6063-T5 ALUMINUM

DRAWN BY:	DATE DRAWN:	SCALE:
TH	7-24-01	1:1

DRAWING NUMBER: 3307667.000#

SHEET: 1 OF 1